ADD: 4th Building,Meitai Technology Park,Guanguang Road,Longhua,Shenzhen,China.518110

free-maintenance battery Technology Specification

Customer _____

Part name free-maintenance battery

Model No PK-645 （6V4.5AH）

Serial No _____

Produce No _____

Approved by		**Drafted by**	Wenfei liang
Checked by		**Signed by**	Xiaojun nie
Prepared by		**Valid Date**	2018-10-30

Company address: 4th Building,Meitai Technology Park,Guanguang Road,Longhua,Shenzhen,China
（Tel）： +86-755-86670672
（Fax）： +86-755-86670609
E-mail： pkcell@pkcell.net pkcell@pkcell.com
Website： http://www.pkcell.net http://www.pkcell.com

ADD: 4th Building,Meitai Technology Park,Guanguang Road,Longhua,Shenzhen,China.518110

free-maintenance battery

PK-645 **[6V4.5AH]**



• Outer dimensions(mm)

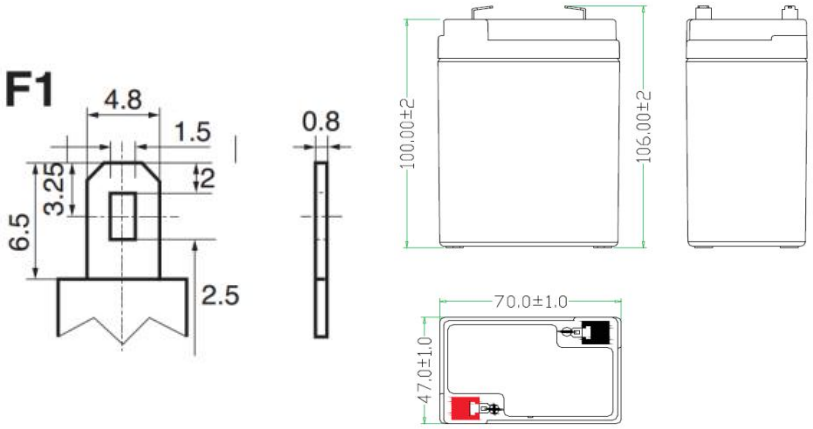

Specification

Nominal voltage		**6V**	**Rate Capacity (20 hour rate)**	**4.5AH**
Dimensions ±1mm	**Length**	**70mm 2.75 in.**	**Weight Approx**	**740g**
	Width	**47mm 1.85 in.**	**Standard Terminal**	**F1**
	Height	**100mm 3.94 in.**		
	Total Height (With Terminals)	**106mm 4.17 in.**	**Optional Terminal**	**N/A**

• Discharge Characteristics(25℃/77F°)

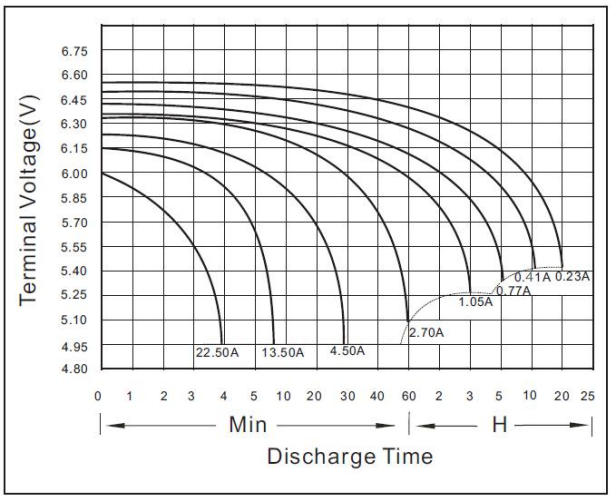

Electrical Specifications

Capacity 77° F(25℃)	20 hour rate(225mA)	4.5AH	Internal Resistance	35mΩ
	10 hour rate(410mA)	4.1AH		
	5 hour rate(765mA)	3.8AH	Full charged battery	
	1 hour rate(2700mA)	2.7AH		
Capacity Affected by Temperature (20hour rate)	104° F(40℃)	102%	Self-discharge 77 °F(25℃)	Capacity after 1 month storage 90%
	77° F(25℃)	100%		Capacity after 3 month storage 75%
	32° F(0℃)	80%		Capacity after 6 month storage 65%
	5° F(-15℃)	50%		Capacity after 12 month storage 55%
Charge Constant Voltage	Cycle use: Initial Charging Current less than 1.35A; Voltage 7.20~7.50V 77° F(25℃) Standby use :Voltage 6.75~6.90V 77° F(25℃)			

Tem perature Effects in Relation to Battery Capacity

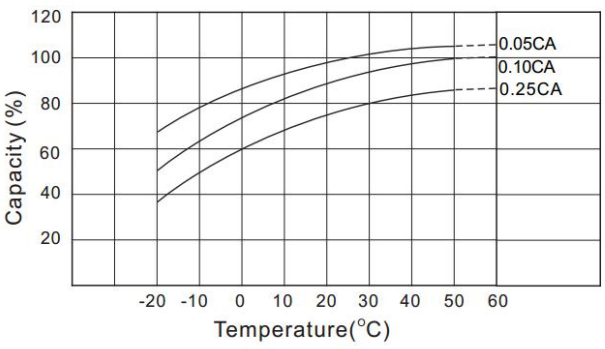

If manufacturer want to modify the product technology specification, we won't inform you additionally)